Farmowners Application
& Stableowners Liability

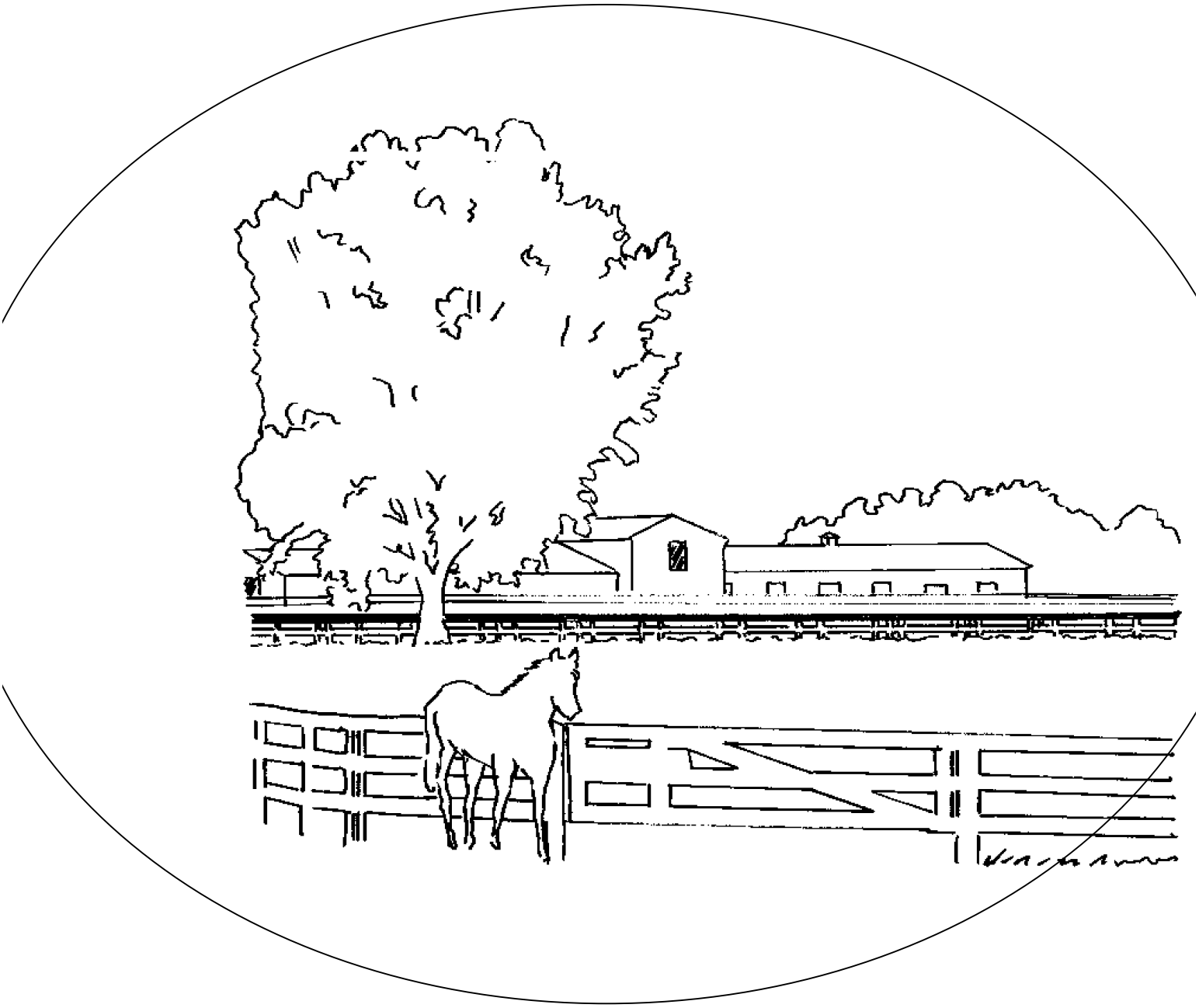

Underwritten by:

American Bankers Insurance Company of Florida

American Bankers
Insurance Company of Florida

222 South 15th Suite 600 S
Omaha, NE 68102

FARMOWNERS APPLICATION
THIS IS NOT A BINDER

Incomplete or unsigned Applications will be returned for completion.

☐ New ☐ Renewal of #_____	DESIRED EFFECTIVE DATE / /	POLICY DEDUCTIBLE ☐ 500 ☐ 1,000 ☐ 2,500 ☐ 5,000

APPLICANT	AGENCY NAME Corinthian Insurance Agency, Inc
DBA	AGENCY CODE 0BV7001
MAILING ADDRESS (INCLUDING CITY, STATE, ZIP CODE)	MAILING ADDRESS (INCLUDING CITY, STATE, ZIP CODE) 89 Main Street Suite 308 Medway, MA 02053
PHONE NUMBER ( ) / FAX NUMBER ( )	PHONE NUMBER (508) 533-5103 / FAX NUMBER (508) 533-5109
EMAIL ADDRESS / SOCIAL SECURITY NUMBER	EMAIL ADDRESS info@corinthianinsurance.com

Applicant is: ☐ Individual ☐ Partnership ☐ Corporation ☐ Other: specify

FEDERAL EIN	NAMES OF ALL PARTNERS OR OFFICERS

Applicant is: ☐ Owner Operator ☐ Absentee Owner ☐ Other: specify _____

GENERAL INFORMATION

1. DESCRIBE FARMING OPERATIONS — APPLICANT'S ADDITIONAL OCCUPATION
2. NUMBER OF YEARS EXPERIENCE IN THIS TYPE OF OPERATION: — NUMBER OF YEARS AT THIS LOCATION:
3. HOW LONG HAS THE AGENT KNOWN THE APPLICANT? — HAS PROPERTY BEEN INSPECTED? ☐ Yes ☐ No IF YES, DATE _____
4. IS OVERALL MAINTENANCE AND CONDITION OF THE GROUNDS, FENCING AND BUILDINGS? ☐ Excellent ☐ Good ☐ Fair ☐ Poor
5. DESCRIBE ANY BUILDINGS OR FENCES IN FAIR OR POOR CONDITION — HOW OFTEN IS FENCING CHECKED?
6. DO YOU HAVE A ROADSIDE MARKET? ☐ Yes ☐ No — "PICK YOUR OWN" OPERATIONS? ☐ Yes ☐ No
7. IS THERE ANY OTHER BUSINESS BEING CONDUCTED ON THE COVERED LOCATION – IF YES, PLEASE DESCRIBE ☐ Yes ☐ No
8. IS THERE A SWIMMING POOL? ☐ Yes ☐ No — IF YES, IS IT ENCLOSED BY A FENCE? ☐ Yes ☐ No — IS IT RESTRICTED TO PRIVATE USE OF RESIDENTS? ☐ Yes ☐ No
9. IDENTIFY LIABILITY HAZARDS – CHECK THE BOXES THAT APPLY
   ☐ Hunting ☐ 3-Wheel ATV or ATC ☐ Trampoline ☐ Ponds/Fishing ☐ Airstrip ☐ Junk Cars ☐ Other _____
   ☐ Bed & Breakfast ☐ Daycare ☐ Overnight Camps
10. DOES APPLICANT RENT OR LEASE ANY OF THE LAND, BUILDINGS, STABLES TO OTHERS? – IF YES, PLEASE EXPLAIN ☐ Yes ☐ No
11. ANY HORSE EXPOSURE? ☐ Yes ☐ No **IF YES, COMPLETE EQUINE LIABILITY SUPPLEMENT.**
12. ANY DOGS ON THE PROPERTY? ☐ Yes ☐ No IF YES, HOW MANY AND WHAT BREED? HAS ANY DOG BITTEN OR CAUSED INJURY TO ANYONE? ☐ Yes ☐ No
13. DOES APPLICANT OWN CATTLE? ☐ Yes ☐ No IF YES, NUMBER OF HEAD AND RANGE ACRES: — SWINE? ☐ Yes ☐ No IF YES, NUMBER OF HEAD: — SHEEP? ☐ Yes ☐ No IF YES, NUMBER OF HEAD AND RANGE ACRES:
14. ADVISE IF ANY NON-DOMESTIC, EXOTIC ANIMALS, EMUS, OSTRICHES, REPTILES, OTHER
15. HAS ANY COMPANY CANCELLED, DECLINED OR REFUSED TO RENEW SIMILAR COVERAGE – IF YES, PLEASE EXPLAIN ☐ Yes ☐ No

PROPERTY AND LIABILITY -- PREVIOUS 3 YEARS CARRIER INFORMATION

COMPANY	POLICY NUMBER	POLICY PERIOD	PREMIUM	NUMBER OF CLAIMS	LOSSES/RESERVE
1.					
2.					
3.					

EXPLAIN ANY LOSSES WITHIN PAST THREE YEARS, INCLUDE APPROXIMATE DATES

PROPERTY SECTION

LOC #	# OF ACRES	LEGAL DESCRIPTION OF LOCATIONS TO BE INSURED, INCLUDING STATE & ZIP CODE	USED BY INSURED	MILES FROM FIRE DEPT.	FEET FROM HYDRANT	W/IN 25 MILES FROM COAST	COUNTY
1			☐YES ☐NO			☐YES ☐NO	
2			☐YES ☐NO			☐YES ☐NO	
3			☐YES ☐NO			☐YES ☐NO	
4			☐YES ☐NO			☐YES ☐NO	
5			☐YES ☐NO			☐YES ☐NO	
6			☐YES ☐NO			☐YES ☐NO	

DWELLING INFORMATION

LOC. NO.	DWL. NO.	COVER. A LIMIT	COVERAGE A DWELLING	COVER. B LIMIT	COVER. C LIMIT	COVERAGE C UNSCHED PERS PROP.	COVERAGE D LOSS OF USE LIMIT	TYPE OF CONST.	YEAR BUILT	MOBILE HOME		DED.	CAUSES OF LOSS BASIC	BROAD	SPECIAL
1			☐ RC ☐ ACV			☐ RC ☐ ACV				☐YES	☐NO		☐	☐	☐
2			☐ RC ☐ ACV			☐ RC ☐ ACV				☐YES	☐NO		☐	☐	☐
3			☐ RC ☐ ACV			☐ RC ☐ ACV				☐YES	☐NO		☐	☐	☐
4			☐ RC ☐ ACV			☐ RC ☐ ACV				☐YES	☐NO		☐	☐	☐
5			☐ RC ☐ ACV			☐ RC ☐ ACV				☐YES	☐NO		☐	☐	☐
6			☐ RC ☐ ACV			☐ RC ☐ ACV				☐YES	☐NO		☐	☐	☐
7			☐ RC ☐ ACV			☐ RC ☐ ACV				☐YES	☐NO		☐	☐	☐

NOTE: Coverage B unavailable in California. Additional Structures can be covered under Coverage E.

DWG. NO.	PRIMARY RESIDENCE Y / N	OCCUP. SEASONAL Y / N	TENANT Y / N	EMPL. Y / N	SQ. FT. GRND FLOOR	LOCAL ALARM Y / N	CENTRAL STATION Y / N	SMOKE/ HEAT DET. Y / N	TYPE OF HEAT	THERMO. CONTROL. Y / N	WOODSTOVE/ FIREPLACE Y / N*	NR. WATER SOURCE Y / N	YEAR UPDATE PLUMBING	ELEC-TRICAL	ROOF
1															
2											*Complete				
3											Woodstove				
4											Suppl.				
5															
6															
7															

FIRST MORTGAGEE	MAILING ADDRESS INCLUDING ZIP CODE	LOAN NUMBER
SECOND MORTGAGEE	MAILING ADDRESS INCLUDING ZIP CODE	LOAN NUMBER
LOSS PAYEE	MAILING ADDRESS INCLUDING ZIP CODE	

ADDITIONAL PERSONAL PROPERTY COVERAGE

SCHEDULED PROPERTY	TOTAL LIMIT	SCHEDULED PROPERTY	TOTAL LIMIT
Jewelry	$	Fine Arts	$
Furs	$	Other	$
Silverware	$	**(A complete schedule and current appraisals (within 3 years) on any item over $1,500 must be provided before coverage can be bound.)**	

SCHEDULE OF COMPUTER EQUIPMENT **DEDUCTIBLE:**

HARDWARE LIMIT	MAKE	DESCRIPTION	SERIAL NUMBER
SOFTWARE LIMIT			

COVERAGE E – SCHEDULED FARM BARNS, BUILDINGS, STRUCTURES, DWELLINGS

LOC #	BLDG #	LIMIT OF INS.	DESCRIPTION	BLDGTYPE 1, 2 OR3	YEAR BUILT	CONSTF / M	HAY Y / N	RC/ ACV	LENGTH & WIDTH	TYPE HEAT	TYPE ROOF	AGE	# OF STALLS	CAUSES OF LOSS BASIC	SPECIAL*	WISS*
1		$														
2		$														
3		$														
4		$														
5		$														
6		$														
7		$														
8		$														

*If Special Form or WISS, Collapse Coverage Supplement MUST be completed.

MOBILE HOME SECTION	MAKE	SERIAL NUMBER(S)	SOLID FOUNDATION	TIE DOWN	SKIRTED
			☐Yes ☐No	☐Yes ☐No	☐Yes ☐No
	MAKE	SERIAL NUMBER(S)	SOLID FOUNDATION	TIE DOWN	SKIRTED
			☐Yes ☐No	☐Yes ☐No	☐Yes ☐No

Identify buildings over 20 years old and advise year heating, plumbing and wiring were updated

"No Smoking" signs posted? ☐yes ☐no

Do any buildings have exposed urethane or styrene insulation – If yes, identify buildings and describe ☐Yes ☐No

Are fire extinguishers maintained in barns and stables? ☐Yes ☐No

Are buildings being renovated, remodeled or under construction – If yes, please explain: ☐Yes ☐No

NOTE: IF DECLINING COVERAGE FOR COLLAPSE DUE TO WEIGHT OF ICE, SLEET OR SNOW, PLEASE INITIAL HERE:

CRITERIA FOR BUILDING TYPES 1, 2, 3

DWELLINGS	FARM BARNS, BUILDINGS & STRUCTURES	SILOS
A. Excellent Repair B. Good Repair C. Foundation – Continuous Construction D. Approved Central Heating E. Modern Electrical & Plumbing System F. Wood Burner as Supplement Heat **Type 1 – ACDE** **Type 2 – BCDEF** **Type 3 – All Others**	A. $4,000 Minimum B. Good Physical Condition C. Not Over One Story D. Foundation – Continuous Construction E. Approved Pole Barn F. Fully Enclosed, No Open Sheds Attached G. No Hay H. Fully Utilized in Farm/Stable Operation **Type 1 – ABC/DEFG** **Type 2 – ABD/EH** **Type 3 – All Others**	**Type 1:** Minimum Amount $5,000. All silos except frame or frame iron clad. **Type 2:** Minimum Amount $1,000. All silos not qualifying for Type 1 except frame or frame iron. **Type 3:** Frame, including frame iron clad. **Mobile Homes** **Type 1:** Must be set on continuous foundation under all exterior walls. **Type 2:** All others not eligible for Type1.

COVERAGE F – SCHEDULED FARM PERSONAL PROPERTY – BASIC PERILS – ACV

1. $ _____ On _____
2. $ _____ On Hay in Barns
3. $ _____ On Hay in Stacks (stack limit of $_____ on hay, max. $10,000, and $_____ on straw and fodder)
4. $._____ On Machinery Not Described (limit $2,500 for any one item)
5. $ _____ On Borrowed, Rented or Leased Farm Machinery and Equipment

	Described Machinery	Year	Make	Model and Serial Number	Open Perils Yes / No

6. $ _____ On _____
7. $ _____ On _____
8. $ _____ On _____
9. $ _____ On Horses (limit $2,500 for any one animal), Type _____
10. $ _____ On Other Livestock (limit $2,500 for any one animal), Type _____
11. $ _____ On Specifically Described Horses (Attach schedule including name, age, sex, and use. Race and show horses not eligible.)
12. $ _____ On contents of dwelling on Coverage E _____
13. $ _____ On _____
14. $ _____ On misc. tools and equipment (limit $1,500 for any one item) _____
15. $ _____ On misc. tack and related equipment (limit $1,500 for any one item) _____
16. $ _____ On specifically described tack (attach schedule)

COVERAGE G – BLANKET FARM PERSONAL PROPERTY

***Limit:**

*Subject to 80% Coinsurance Clause – Complete Coverage G Blanket Supplement

DIAGRAM

SHOW ALL BUILDINGS ON THE PREMISES (WHETHER INSURED OR NOT), OUTSIDE DIMENSIONS AND DISTANCE BETWEEN EACH. INDICATE NC IF NOT COVERED. LABEL ALL BUILDINGS AND ATTACH A CLEAR, DATED PHOTO OF EACH BUILDING. (DIGITAL PHOTOS/DOCUMENTS CAN BE ACCEPTED OVER THE INTERNET.)

N

W E

S

LIABILITY SECTION

LIMITS OF LIABILITY CHECK ONE

☐ **$500,000** ☐ **$1,000,000** ☐ **Other $** _____

$5,000 Medical Payments to Others Included. $50,000 Fire Legal Liability. Inquire about the availability of higher limits and options.

LIABILITY FORMS

☐ Farm Liability **or** ☐ Commercial Farm/Stable With Personal Liability: ☐ Included ☐ Excluded

Umbrella Coverage is available in most states. Please contact your agent for information and an application.

ADDITIONAL INSURED (SUBJECT TO COMPANY APPROVAL)

Name	Address	Interest	Reason

ADDITIONAL RESIDENCE PREMISES OCCUPIED BY INSURED (LIABILITY ONLY)

WATERCRAFT LIABILITY (GL-82) MVR Required

Complete Description	Make	Serial #	Length	H.P.	M.P.H.

SNOWMOBILE LIABILITY (GL-83) MVR Required

Complete Description	Make Or Model	Serial #

OFFICE, PROFESSIONAL, PRIVATE SCHOOL, STUDIO OCCUPANCY (GL-80)

Description Of Business	Location

INCIDENTAL BUSINESS PURSUITS – EXCLUDING PRODUCTS AND COMPLETED OPERATIONS (GL-90)

Name Of Insured(s)	Business Description	Estimated Gross Annual Receipts

ARE YOU ENGAGED IN CUSTOM FARM WORK (GL-75) ☐ Yes ☐ No IF YES, PROVIDE ESTIMATE OF ANNUAL RECEIPTS: $

DO YOU CARRY WORKERS COMPENSATION COVERAGE ☐ Yes ☐ No CARRIER POLICY NUMBER

FAIR CREDIT REPORTING ACT NOTICE

A consumer report may be requested by the insurer to which this application is submitted. Subsequent consumer reports may be requested in connection with an update or renewal or extension of the insurance for which this application is made. The applicant, upon request, will be informed whether or not a consumer report was requested, and if such report was requested, informed of the name and address of the consumer reporting agency that furnished the report.

STANDARD FRAUD WARNING

Any person who knowingly and with intent to defraud any insurance company or other person files an application for insurance or statement of claim containing any materially false information or conceals, for the purpose of misleading, information concerning any fact material thereto, commits a fraudulent insurance act, which is a crime, and may subject such person to criminal and substantial civil penalties. (This wording does not apply in Oregon.)

☐ FLORIDA: Any person who knowingly and with intent to injure, defraud or deceive any insurer files a statement of claim or an application containing any false, incomplete or misleading information is guilty of a felony of the third degree.

☐ NEW JERSEY: Any person who includes any false or misleading information on an application for an insurance policy is guilty of insurance fraud and is subject to criminal and civil penalties.

☐ VIRGINIA: It is a crime to knowingly provide false, incomplete or misleading information to an insurance company for the purpose of defrauding the company. Penalties include imprisonment, fines and denial of insurance benefits.

☐ WASHINGTON D.C.: WARNING: It is a crime to provide false or misleading information to an insurer for the purpose of defrauding the insurer or any other person. Penalties include imprisonment and/or fines. In addition, an insurer may deny insurance benefits if false information materially related to a claim was provided by the applicant.

The undersigned hereby applies for insurance coverage as set forth in the application and affirms that the statements and representations made are to the best of his/her knowledge true.

DATE	APPLICANT'S SIGNATURE (REQUIRED)		
/ /	X		
DATE	AGENT'S SIGNATURE (REQUIRED)	DATE OF LAST INSPECTION	☐ I have NOT seen the property.
/ /	X	/ /	☐ I have seen the property.

The following Supplements are attached (please check):

☐ Equine Liability Supplement
☐ Coverage G – Blanket Farm Personal Property Supplement
☐ Fireplace, Wood Burning Stove Supplement
☐ Collapse Coverage Supplement

CHECK EACH COVERAGE DESIRED (ALL COVERAGE MAY NOT BE AVAILABLE IN ALL STATES – THIS IS NOT A COMPLETE LIST)			
ENDORSEMENT #	COVERAGE OPTIONS	ENDORSEMENT #	COVERAGE OPTIONS
☐ FO-15	Actual Cash Value		
☐ FO-30	Incidental Property Coverages – Higher Limits	☐ FO-364	Replacement Cost Provision for Well Pumps
☐ FO-48	Related Private Structures	☐ FO-6 Policy Form	Farm Extra Expense $_____ Limit
☐ FO-54	Earthquake	☐ GL-9	Personal Liability Coverage
☐ FO-55	Replacement Value	☐ GL-40	Structures Rented to Others
☐ FO-60	Debris Removal	☐ GL-71	Additional Insured – Separate Residence
☐ FO-61	Scheduled Personal Property	☐ GL-72	Additional Insureds – Other Residences
☐ FO-65	Coverage C – Higher Limit of Liability on Certain Property	☐ GL-73	Additional Residences or Farms – Rented to Others
☐ FO-68	Scheduled Glass	☐ GL-74	Business Activities
☐ FO-69	Business Property – Business Occupancy on the Insured Premises	☐ GL-75	Custom Farm Work
☐ FO-70	Ordinance or Law	☐ GL-78	Fruit or Vegetable Picking – By Public
☐ FO-75	Amendment of Vacancy or Unoccupancy	☐ GL-80	Office, Professional, Private School, or Studio Occupancy
☐ FO-123	Pollutant Clean Up and Removal	☐ GL-81	Personal Injury (with GL-2, GL-9 only)
☐ FO-125	Dwelling Under Construction – Theft	☐ GL-82	Watercraft
☐ FO-170	Computers	☐ GL-83	Snowmobile
☐ FO-200	Replacement Cost Terms – Mobile Homes	☐ GL-90	Incidental Business Pursuits
☐ FO-208	Water Damage – Sewers, Drains and Sumps	☐ GL-95	Products Aggregate Limits
☐ FO-216	Premises Alarm or Fire Protection System	☐ GL-108	Additional Insured - CL
☐ FO-256	Modified Replacement Cost Terms	☐ GL-615	Exclusion of Products/Completed Work Coverage
☐ FO-257	Ordinance or Law – Farm Barns, Buildings and Structures	☐ GL-841	Additional Insureds
☐ FO-307	Sprinkler Leakage		
☐ FO-323	Weight of Ice, Snow or Sleet	☐ GL-904	Personal and Advertising Injury Liability Coverage (with GL-610 only)
☐ FO-330	Incidental Property Coverages – Higher Limits	☐ AD9182EM	Horse Boarding Operations
☐ FO-340	Limited Perils – Coverages E, F and G		
☐ FO-341	Replacement Cost Terms – Farm Barns, Buildings and Structures		
☐ FO-345	Theft of Building Materials – Farm Barns, Buildings and Structures		
☐ FO-350	Debris Removal – Coverages E and F		
☐ FO-352	Peak Season Inventory – Farm Personal Property		
☐ FO-354	Earthquake – Coverages E, F and G		
☐ FO-356	Added Animal Perils		
☐ FO-360	Farm Machinery		
☐ FO-361	Property in Transit – Coverages F and G		
☐ FO-362	Special Form Coverage – Farm Barns, Buildings, and Structures		
☐ FO-363	Repair or Rebuilding Requirement		

EQUINE LIABILITY SUPPLEMENT

THIS SUPPLEMENT FORMS PART OF OUR FARMOWNER APPLICATION

(Umbrella coverage is available in most states. Please contact your agent for information and an application.)

SECTION I SUMMARY OF HORSES – AT PEAK SEASON

ACCOUNT FOR EACH ANIMAL BELOW ONLY ONCE, BASED ON ITS PRIMARY USE

Horses Owned/Leased/Used by Insured	Number
1. a. Owned horses used for instruction	_____
b. Boarded horses used for instruction to others	_____
2. Show and/or pleasure	_____
3. Racing and/or training to race	_____
4. Breeding (Mares _____, Stallions _____)	_____
5. Foals/weanlings	_____
6. Retired and/or lay-ups	_____
7. For sale (Breed _____)	_____
8. Other (Describe _____)	_____
All Owned Horses Must be Declared ..... Total (Lines 1-8)	_____
9. Number of carts, buggies, carriages, etc.	_____

Is cart used on premises only? ☐ Yes ☐ No

Describe use: _____

Horses Non-Owned by Insured	Number
1. Boarding/pasturing	_____
2. Show training	_____
3. Racing and/or training to race	_____
4. Breeding (Mares _____, Stallions _____)	_____
5. Foals/weanlings	_____
6. Retired and/or lay-ups	_____
7. Consignment for sale (Breed _____)	_____
8. Other (Describe _____)	_____
Total (Lines 1-8)	_____
9. Total number of stalls on your premises.	_____
10. What is the maximum number of horses, owned and non-owned, that can be kept in your premises	_____

SECTION II HORSES NON-OWNED BOARDING, BREEDING, TRAINING, RACING

☐ CHECK IF NO EXPOSURE

1. TOTAL # OF STALLS	MAXIMUM # BOARDED	PASTURED	MONTHLY BOARDING RATE $	ANNUAL GROSS $
2. TRAINING PLEASURE & SHOW – MAXIMUM # OF NON-OWNED HORSES IN TRAINING			MONTHLY TRAINING RATE $	ANNUAL GROSS $
3. BREEDING - # OF NON-OWNED STALLIONS	BREED		MAX # OF OUTSIDE MARES	ARE MARES KEPT ON PREMISES UNTIL FOALING ☐ Yes ☐ No
4. RACE HORSES – WHAT BREEDS	HOW MANY DO YOU TRAIN FOR OTHERS		PAYROLL $	WHAT STATES DO YOU RACE IN

ARE YOU ACTIVELY INVOLVED IN THE RACING/TRAINING OF YOUR OWN RACE HORSES

☐ Yes ☐ No

SECTION III SALES HORSE, FOOD, CLOTHING, TACK, FEED, HORSESHOEING

☐ CHECK IF NO EXPOSURE

1. DO YOU SELL HORSES ☐ Yes ☐ No	WHAT BREEDS	HOW MANY PER YEAR	GROSS ANNUAL RECEIPTS $
2. IS BUYER ALLOWED TO TEST RIDE ☐ Yes ☐ No	IF YES ☐ In arena ☐ In open field	DO YOU SELL FROM YOUR OWN PREMISES ☐ Yes ☐ No	
3. EXPLAIN ANY OTHER METHOD OF SALES			
4. DO YOU SELL FOOD OR HAVE A SNACK BAR (LIQUOR LIABILITY NOT COVERED) ☐ Yes ☐ No			GROSS RECEIPTS $
5. DO YOU SELL TACK AND/OR CLOTHING – IF YES, USED OR NEW ☐ Yes ☐ No ☐ Used ☐ New			GROSS RECEIPTS $
6. DO YOU SELL HAY OR FEED ☐ Yes ☐ No			GROSS RECEIPTS $
7. DO YOU MIX FEED FOR SALE/CONSUMPTION ☐ Yes ☐ No			
8. DO YOU REPAIR RIDING EQUIPMENT FOR OTHERS ☐ Yes ☐ No			
9. DO YOU PERFORM ANY TYPE OF FARRIER SERVICES (INJURY TO HORSE NOT COVERED) ☐ Yes ☐ No			

If on premises only this coverage can be added to this policy.

ARE SERVICES ON PREMISE ONLY	GROSS RECEIPTS
☐ Yes ☐ No	$

NOTE: Products liability for any and all exposures involving sale of horses or other livestock, repair of tack, sale of feed if mixed or prepared by the insured is excluded from coverage.

SECTION IV EQUESTRIAN SCHOOLS – RIDING INSTRUCTION – CLINICS

☐ CHECK IF NO EXPOSURE

1. IS INSTRUCTION PROVIDED BY ☐ You ☐ An Independent Instructor

If an independent instructor/trainer is used, complete Section V.

ARE YOU A CERTIFIED INSTRUCTOR ☐ Yes ☐ No

2. DESCRIBE TYPE OF SAFETY GEAR REQUIRED

3. DO YOU PROVIDE RIDING FOR THE HANDICAPPED	# OF HORSES AVAILABLE FOR HANDICAPPED	GROSS ANNUAL RECEIPTS
☐ Yes ☐ No		$

NON-PROFIT	RATIO OF INSTRUCTORS TO STUDENTS
☐ Yes ☐ No	
ARE SIDEWALKERS USED	VOLUNTEER COVERAGE REQUESTED
☐ Yes ☐ No	☐ Yes ☐ No

4. MAXIMUM NUMBER OF SCHOOL HORSES AVAILABLE	MAXIMUM NUMBER USED AT ANY ONE TIME	GROSS ANNUAL RECEIPTS
		$

5. ARE STALLIONS USED FOR INSTRUCTION	IF SO, INDICATE THE LEVEL OF THE RIDER AND AGE
☐ Yes ☐ No	

6. DO YOU GIVE INSTRUCTION TO STUDENTS ON THEIR OWN HORSES	IF SO, ADVISE AVERAGE NUMBER OF LESSONS PER WEEK	ANNUAL GROSS RECEIPTS
☐ Yes ☐ No		$

7. DO YOU TEACH ☐ English ☐ Jumping ☐ Saddle Seat ☐ Western ☐ Dressage ☐ Other:

8. IS THERE ANY PERIOD OF THE YEAR DURING WHICH YOU DO NOT GIVE INSTRUCTIONS – IF SO, GIVE DATES CLOSED ☐ Yes ☐ No

9. DO YOU ATTEND OFF-PREMISES SHOWS WITH YOUR STUDENTS	HOW MANY TIMES PER YEAR	GROSS RECEIPTS
☐ Yes ☐ No		$

Injuries to horses and students being transported are not covered.

10. DO YOU HOLD CLINICS FOR NON-STUDENTS	HOW MANY DAYS	AVERAGE ATTENDANCE	RECEIPTS EARNED
☐ Yes ☐ No			$

11. DO YOU OPERATE A DAY CAMP	OVERNIGHT CAMP	DO YOU PROVIDE FOOD	GROSS RECEIPTS FOR CAMP
☐ Yes ☐ No	☐ Yes ☐ No	☐ Yes ☐ No	$

12. DESCRIBE ALL ACTIVITIES OFFERED AT CAMPS OTHER THAN RIDING INSTRUCTIONS

SECTION V INDEPENDENT INSTRUCTORS / TRAINERS

☐ CHECK IF NO EXPOSURE

1. DO INDEPENDENT TRAINERS OR INSTRUCTORS OPERATE ON YOUR PREMISES – IF SO, HOW MANY ☐ Yes ☐ No

DO THEY CARRY THEIR OWN INSURANCE++ ☐ Yes ☐ No

++ If so, we will require a copy of a Certificate of Insurance for each insured for coverage with limits equal to those you carry. We will also require that they name you as an additional insured under their policy. If the independent instructors or trainers DO NOT carry their own insurance, they will be added as an insured for an additional charge if eligible. Coverage is limited to on-premises only and to off-premise shows with horses and/or riders in training.

PROVIDE NAMES OF INDEPENDENT INSTRUCTORS OR TRAINERS AND ADDRESSES (MUST BE 18 YEARS OF AGE OR OLDER)

INDEPENDENTS COVERED ON THIS POLICY MUST USE A RELEASE – **ATTACH COPY(IES)**

2. HOW MANY HORSES ARE PROVIDED FOR LESSONS BY INDEPENDENT INSTRUCTORS	GROSS RECEIPTS	GROSS RECEIPTS FOR INSTR. TO STUDENTS ON THEIR OWN HORSES
	$	$

3. HOW MANY OF YOUR BOARDED HORSES ARE BEING TRAINED BY INDEPENDENT TRAINERS	OR TRAINED UNDER YOUR NAME

SECTION VI PONY RIDES/SADDLE ANIMALS FOR HIRE/HOURLY OR DAILY RENTALS/TRAIL RIDES/LEASING/PACK TRIPS -- NO BINDING AUTHORITY -- MUST BE REFERRED TO H.O.

☐ CHECK IF NO EXPOSURE

1. # OF ANIMALS AVAILABLE FOR RENTAL OR TRAIL RIDES	GROSS RECEIPTS FOR RENTALS $	GROSS RECEIPTS FOR TRAIL RIDES $	DO YOU CONDUCT PACK TRIPS ☐ Yes ☐ No
2. PONY RIDES/PARTIES – NUMBER OF PONIES		GROSS RECEIPTS $	DO YOU USE SIDEWALKERS ☐ Yes ☐ No

3. DO YOU RENT OR LEASE HORSES OR PONIES TO CAMPS/RESORTS OR INDIVIDUALS – IF SO, HOW MANY – PLEASE EXPLAIN

☐ Yes ☐ No

SECTION VII RIDES, HORSE SHOWS AND MISCELLANEOUS ACTIVITIES -- NO BINDING AUTHORITY

☐ CHECK IF NO EXPOSURE

1. RIDES:	# OF PASSENGERS	GROSS RECEIPTS	# OF WAGONS	# OF HORSES	# OF MOTOR VEH	# OF TRIPS	ON OR OFF PREMISES
☐ Hay ☐ Sleigh ☐ Carriage		$					

2. SHOWS:

INDEPENDENT VENDORS ARE NOT COVERED

Are these shows recognized by the American Horse Show Association? ☐Yes ☐No | Do you manage any shows open to boarders or non-students? ☐Yes ☐No

SHOWS	# OF PARTICIPANTS	GROSS RECEIPTS ALL SHOWS	MAX # OF SPECTATORS PER DAY	TOTAL # OF SHOW DAYS	SHOW DATES
Shows on Premises		$			
Rodeos on Premises		$			

3. Do you secure releases from all entrants – Attach a sample ☐Yes ☐No | Does number of spectators ever exceed 500 per day? ☐Yes ☐No

4. Do you have bleachers or grandstands? ☐Yes ☐No | Construction | Year built | Seating capacity – #

5. Do you manage any hunts or racing events? ☐Yes ☐No If yes, what type? | Do you own/use/lease any hounds for hunts? ☐Yes ☐No | How many hounds?

6. If rodeos on premise, describe type of events:

7. Do you allow non-boarders to use your facilities – If yes, please explain ☐Yes ☐No | Gross receipts: $

8. All operations must be declared – Describe fully any other events or operations not already mentioned in this application:

_____

_____

NOTE: Coverage is not provided for injury to participants in horse races, rodeos, rodeo-type events, hunts, vaulting, and polo matches/practice.

GENERAL INFORMATION AND UNDERWRITING QUESTIONNAIRE

1. Number of years at this location | Number of years experience in these operations

2. If less than five (5) years, give brief description of experience and background in horse business

_____

_____

Do you obtain a release signed by boarders and students relieving you of claims for BI & PD - ☐Yes ☐No **IF YES, A COPY MUST BE SUMBITTED WITH THIS APPLICATION BEFORE ISSUANCE**

4. Do you post rules : ☐Yes ☐No | Do you post warning signs: ☐Yes ☐No | Describe any safety program or attach information

5. Describe type of all fencing:

6. Describe condition: ☐ Excellent ☐ Good ☐ Fair ☐ Poor | How often is fencing checked?

Person to contact for inspection: | Telephone Number: ( )

REFER TO FRAUD WARNINGS ON PAGE 7 OF THE FARMOWNER APPLICATION

The undersigned hereby applies for insurance coverage as set forth in the application and affirms that the statements and representations made are to the best of his/her knowledge true.

APPLICANT'S SIGNATURE	DATE	AGENT'S SIGNATURE	DATE
X	/ /	**X**	/ /

Note: Farmowners and commercial liability policies generally exclude liability coverage for damage to non-owned property in the care, custody or control of the insured. Please complete a separate Care, Custody or Control application for the non-owned horses in your care. Your signature is requested below, if you are **declining** this coverage.

X _____

IMPORTANT – ORIGINAL APPLICATION MUST BE RETURNED

INSURED'S SIGNATURE IS REQUIRED TO PROVIDE A FIRM QUOTE AND IN ORDER TO BIND COVERAGE

COVERAGE G – BLANKET FARM PERSONAL PROPERTY SUPPLEMENT TO THE FARMOWNER APPLICATION

NAME OF APPLICANT	POLICY/QUOTE NUMBER

NOTE: Coverage cannot be bound without a completed inventory (Minimum limit $15,000.)

MACHINERY	UNIT PRICE	TOTAL VALUE	TOOLS & SUPPLIES	UNIT PRICE	TOTAL VALUE	LIVESTOCK	UNIT PRICE	TOTAL VALUE
Tractor No. 1	$	$	Milk House Utensils & Sup.	$	$	Horses	$	$
Tractor No. 2	$	$	Hog Feeders	$	$	Ponies	$	$
Tractor No. 3	$	$	Hog Fountains	$	$	Sheep	$	$
Tractor No. 4	$	$	Tank Heaters	$	$	Dairy Cows	$	$
			Farrowing Crates	$	$	Heifers	$	$
			Poultry Feeders	$	$	Beef Cows	$	$
			Poultry Waterers	$	$	Beef Calves	$	$
			Hen Nests	$	$	Bulls	$	$
Crop Drier	$	$	Electric Motors	$	$			
Corn or Grain Head	$	$	Gas Engines	$	$	**TOTAL LIVESTOCK**		$
Corn Picker	$	$	Fuel Tank and Stand	$	$	**EQUESTRIAN EQUIPMENT**	**UNIT PRICE**	**TOTAL VALUE**
Corn Planter	$	$	Tractor Fuel	$	$			
Plows	$	$	Oil and Grease	$	$	Saddles	$	$
Chisel Plow	$	$	Electric Welders	$	$	Show Saddles	$	$
Vibratiller	$	$	Acetylene Welders	$	$	Bridles, Bits, Reins	$	$
Disc	$	$	Spare Parts	$	$	Jog Carts, Bikes	$	$
Quack Digger	$	$	Chain Saws	$	$	Buggies	$	$
Harrows and Curl	$	$	Power Saws	$	$	Blankets, Hoods	$	$
Cultipacker	$	$	Posthole digger	$	$	Sheets, Coolers	$	$
Rotaryhoe and Truck	$	$	Electric Fencer	$	$	Grooming Equipment	$	$
Rotatiller	$	$	Air Compressor	$	$	Halters, Lead Lines	$	$
Cultivators	$	$	Wheel Barrows	$	$	Harnesses	$	$
Drills and Seeders	$	$	Fertilizer	$	$	Tail Sets	$	$
Fertilizer Spreaders	$	$	Spray Material	$	$	Jumping Equipment	$	$
Manure Spreaders	$	$	Fans	$	$	Automatic Waterers	$	$
Manure Loader	$	$	Building Material	$	$	Wood Shavings	$	$
Stalk Cutters	$	$	Paint	$	$	Insect Control Equipment	$	$
Weed Sprayer	$	$	Power Tools	$	$	Lounge Furniture	$	$
Anhydrous Applier	$	$				Tack Trunks	$	$
Corn Sheller	$	$				Tack Room (Portable)	$	$
Grain Cleaner	$	$	Hand Tools (forks, shovels, brooms, hammers, saws, wrenches, rakes, etc., other misc. small tools)			Tack Room Accessories	$	$
Silo Filler	$	$			$	Stable Banners	$	$
Silo Unloader	$	$	Misc. Equipment (tarps, chains, parts, clippers, etc.)			Water Tanks	$	$
Mowers	$	$			$	Whips, Whip Box	$	$
Forage Harvester	$	$	**TOTAL TOOLS AND SUPPLIES**		$	Misc. Tack	$	$
Hay Conditioner	$	$	**GRAIN AND FEED**	**UNIT PRICE**	**TOTAL VALUE**	Misc. Stable Equipment	$	$
Hay Crimper	$	$						
Hay Fluffer	$	$	Wheat	$	$	**TOTAL EQUESTRIAN**		$
Hay Rake	$	$	Oats Acres	$	$			
Hay Swather	$	$	Barley	$	$	**SUMMARY**		
Hay Baler	$	$	Corn Acres	$	$	Total Value of Listed Items		$
Auger Wagons	$	$	Sealed Wheat Bushels	$	$	Other Unlisted Farm Personal Property		$
Chopper Wagons	$	$	Sealed Corn Bushels	$	$	Sub-Total		$
Wagons	$	$	Soybeans	$	$	Less Value of Excluded Property		$
Feed Trailers	$	$	Ground Feed	$	$	**TOTAL VALUE**		$
Feed Grinder	$	$	Hay (Bales or Tons)	$	$	Limit of Liability		$
Hammer Mill	$	$	Straw (Bales or Tons)	$	$			
Feed Mixer	$	$				AT TIME OF LOSS UNLESS SPECIFICALLY EXCLUDED IN THE POLICY, THE VALUE OF ALL FARM PERSONAL PROPERTY OWNED BY THE INSURED WILL BE INCLUDED TO ESTABLISH COMPLIANCE WITH THE CO-INSURANCE CLAUSE.		
Feed Carts	$	$						
Auger Elevators	$	$						
Portable Elevators	$	$				**EXCLUDED PROPERTY:**		
Irrigation Equipment	$	$						
Power Lawn Mower	$	$						
TOTAL MACHINERY		$	**TOTAL GRAIN AND FEED**		$			

FIREPLACE, WOOD BURNING STOVE SUPPLEMENT

ATTACH PHOTO -- COMPLETE IN FULL

APPLICANT	POLICY/QUOTE NUMBER

FIREPLACE INSERT COMPLETE QUESTIONS 1-6	FIREPLACE (BUILT-IN) COMPLETE QUESTIONS 1-4	FREE STANDING FIREPLACE &/OR STOVE COMPLETE QUESTIONS 1-6

1. TYPE OF HEATING EQUIPMENT
   - ☐ Built-In Fireplace ☐ Free Standing Fireplace ☐ Free Standing Stove
   - ☐ Furnace Supplement ☐ Other: _____
2. IS THIS UNIT A MAJOR HEAT SOURCE FOR THE DWELLING? ☐ Yes ☐ No
3. WERE CHIMNEY AND EQUIPMENT INSTALLED BY CONTRACTOR? ☐ Yes ☐ No — NAME AND ADDRESS IF OTHER THAN THE HOME BUILDER
4. CHIMNEY INFORMATION – TYPE OF CHIMNEY
   - ☐ Masonry with tile flue liner ☐ Prefab'd metal chimney (UL approved)
   - ☐ Other _____

WHEN WAS CHIMNEY LAST CLEANED? | HOW OFTEN IS CHIMNEY CLEANED?

CLEANED BY WHOM? ☐ Insured ☐ Chimney Sweep* ☐ Contractor*

*NAME AND ADDRESS

IS MORE THAN ONE UNIT VENTED INTO THE SAME CHIMNEY FLUE? ☐ Yes ☐ No

THE FOLLOWING QUESTIONS SHOULD BE ANSWERED FOR FREE STANDING FIREPLACES AND/OR STOVES.

BRAND NAME: | YEAR PURCHASED:

5. DOES YOUR FREE STANDING HEATING UNIT HAVE THE MINIMUM CLEARANCES OF:
   - ☐ Yes ☐ No 36" between the stove box and any unprotected combustible surface in all directions
   - ☐ Yes ☐ No 4" between stove and floor
   - ☐ Yes ☐ No Pad under stove (see diagrams below)
6. STOVE PIPE INFORMATION – DIAMETER OF PIPE | DISTANCE FROM THE NEAREST COMBUSTIBLE SURFACE

ARE PIPE SECTIONS OR JOINTS FASTENED WITH METAL SCREWS? ☐ Yes ☐ No | DOES THE PIPE PASS THROUGH FLOOR, WALLS OR CEILINGS? ☐ Yes ☐ No

IF SO, IS IT PROTECTED WITH A: ☐ Ventilated thimble ☐ Fuel connector ☐ Fire stop spacer

IS MORE THAN ONE UNIT VENTED INTO THE SAME CHIMNEY? ☐ Yes ☐ No

DATE / / | INSURED'S SIGNATURE X

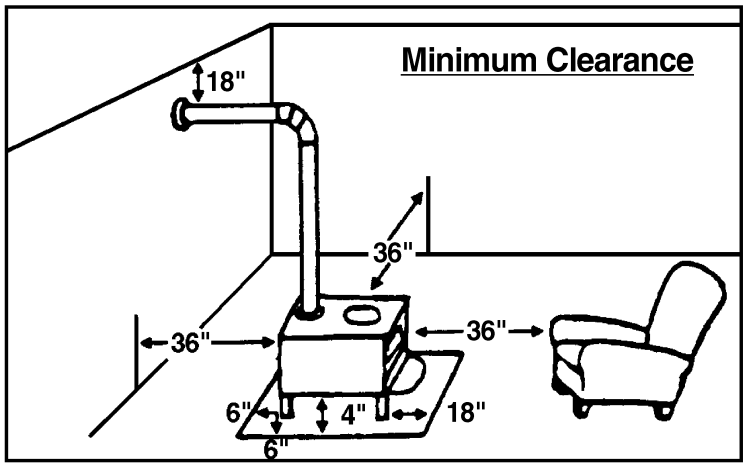

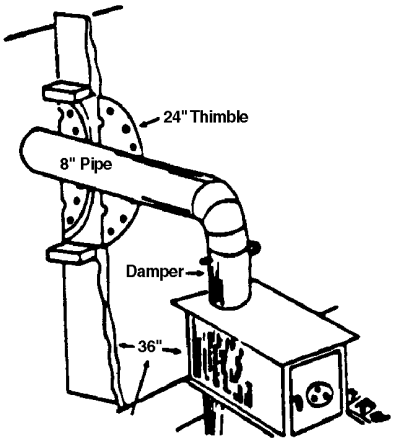

THESE CLEARANCES CAN BE REDUCED IF YOUR FLOOR OR COMBUSTIBLE WALL IS PROTECTED BY BRICKS WITH MORTAR OR BY METAL COVERED ASBESTOS STOVE BOARD. THE PAD UNDER YOUR STOVE SHOULD EXTEND 18" BEYOND THE ASH REMOVAL DOOR OR YOUR STOVE.

SPECIAL and/or COLLAPSE COVERAGE SUPPLEMENT

NAMED INSURED/APPLICANT	POLICY NUMBER

ANSWER ALL QUESTIONS TO THE BEST OF YOUR ABILITY

	LOC # _____ BLDG # _____	LOC # _____ BLDG # _____	LOC # _____ BLDG # _____	LOC # _____ BLDG # _____
	CHECK ONE			
1. Does any part of the structure (i.e., door frames or window frames) indicate foundation settling?	☐Y ☐N	☐Y ☐N	☐Y ☐N	☐Y ☐N
2. Is the roof ridge line straight, indicating sidewalls have not spread?	☐Y ☐N	☐Y ☐N	☐Y ☐N	☐Y ☐N
3. Are the windowsills firmly anchored showing no signs of deterioration?	☐Y ☐N	☐Y ☐N	☐Y ☐N	☐Y ☐N
4. To the best of your knowledge, does the total design load meet or exceed local building codes? Explain any "no" answer in Comments below.	☐Y ☐N	☐Y ☐N	☐Y ☐N	☐Y ☐N
5. Who built the building/structure? (I = Insured; C = Contractor)	☐I ☐C	☐I ☐C	☐I ☐C	☐I ☐C
6. Is building fully enclosed, no open sheds attached?	☐Y ☐N	☐Y ☐N	☐Y ☐N	☐Y ☐N
7. Is proper roof drainage supplied?	☐Y ☐N	☐Y ☐N	☐Y ☐N	☐Y ☐N
8. What is the approximate pitch of the roof?				
9. Is weed/brush growth around the building properly controlled?	☐Y ☐N	☐Y ☐N	☐Y ☐N	☐Y ☐N
10. If the building is on a concrete block foundation, does an inspection reveal cracks and/or separation?	☐Y ☐N	☐Y ☐N	☐Y ☐N	☐Y ☐N
11. In your estimation, is the quality of construction: (Average = A; Below Average = BA; or Above Average = AA)	☐A ☐BA ☐AA	☐A ☐BA ☐AA	☐A ☐BA ☐AA	☐A ☐BA ☐AA

12. Describe any special precautions that are taken during severe snow and ice storms: _____

13. Comments: _____

INSPECTED BY (NAME)	DATE

☐Agent ☐Engineer ☐Company Representative ☐Other _____